CY8CKIT-148-COIL Inductive Sensing Coil Breakout Board

CONTENTS

PAGE	DESCRIPTION
01	Title, Table of Contents & Drawing Numbers
02	Block Diagram
03	Inductive Sensors 1 : Linear Encoder, Button / Proximity Sensors (25 mm coils), Rotary Encoder
04	Inductive Sensor 2 : 6-Segment Sliders
05	Inductive Sensors 3 : Linear Target, Proximity Sensors (5mm, 15 mm coils), Square coils (20 mm)
06	Accesories
07	Revision History

Drawing Numbers	
PCBA	121-60529-01
PCB	600-60529-01
FAB DRW	610-60529-01
ASSY DRW	620-60529-01
SCH DRW	630-60529-01

CYPRESS SEMICONDUCTOR
198 CHAMPION COURT
SAN JOSE, CA 95134
(408) 943-2600

CYPRESS SEMICONDUCTOR © 2019

SCH Title : CY8CKIT-148-COIL Inductive Sensing Coil Breakout Board

Page Title : Title Page

Size	Document Number	Drawn By	Approved By	Rev
A4	630-60529-01	TAVA	RKAD	2.0

Date: Sunday, May 05, 2019 Sheet 1 of 7

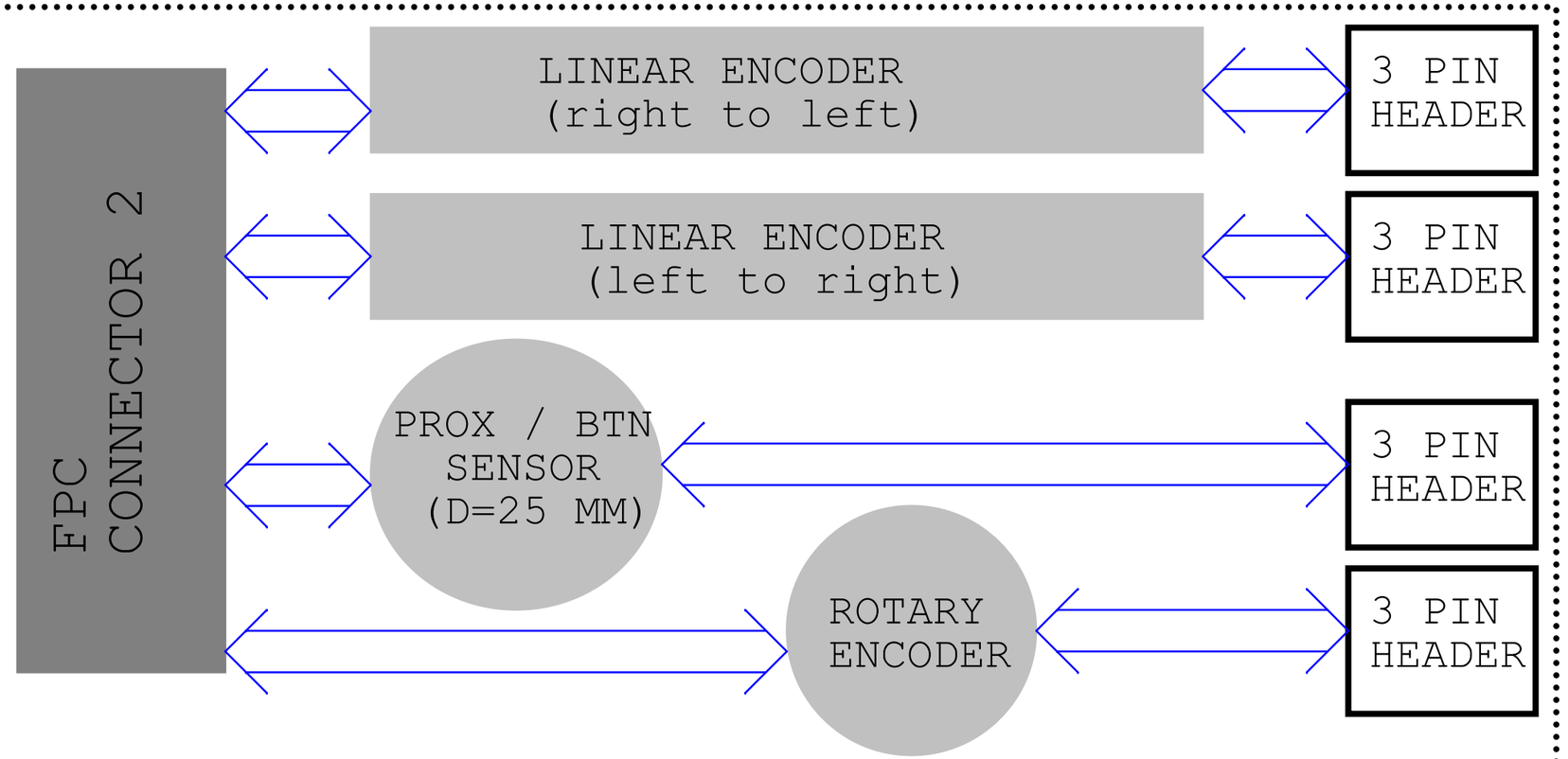

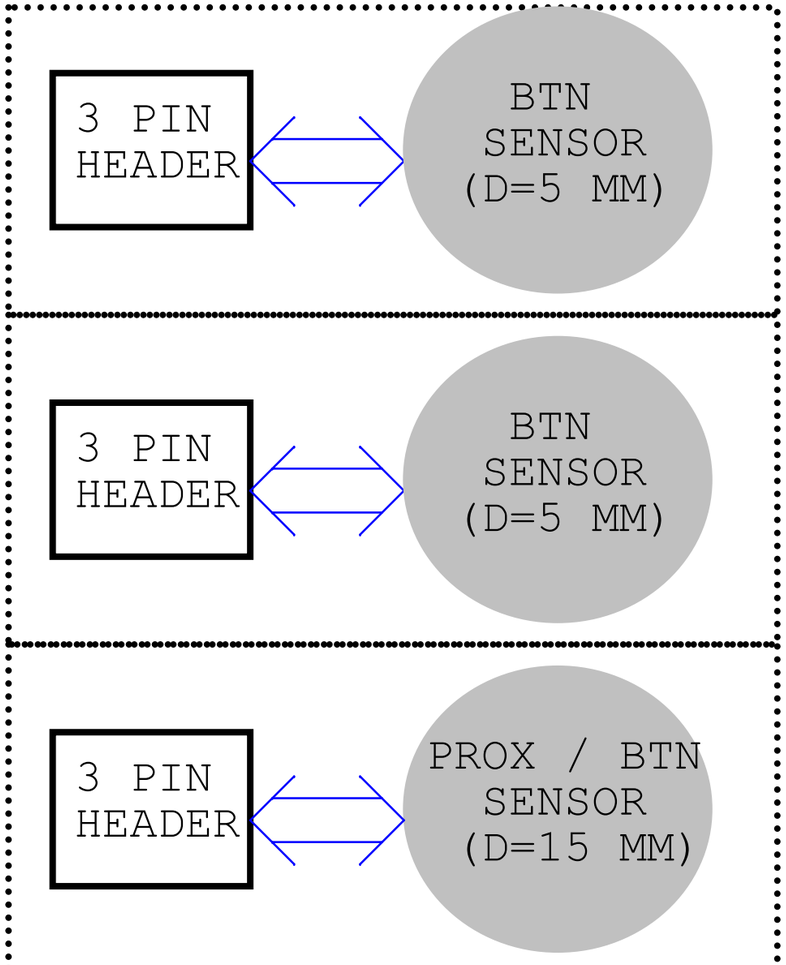

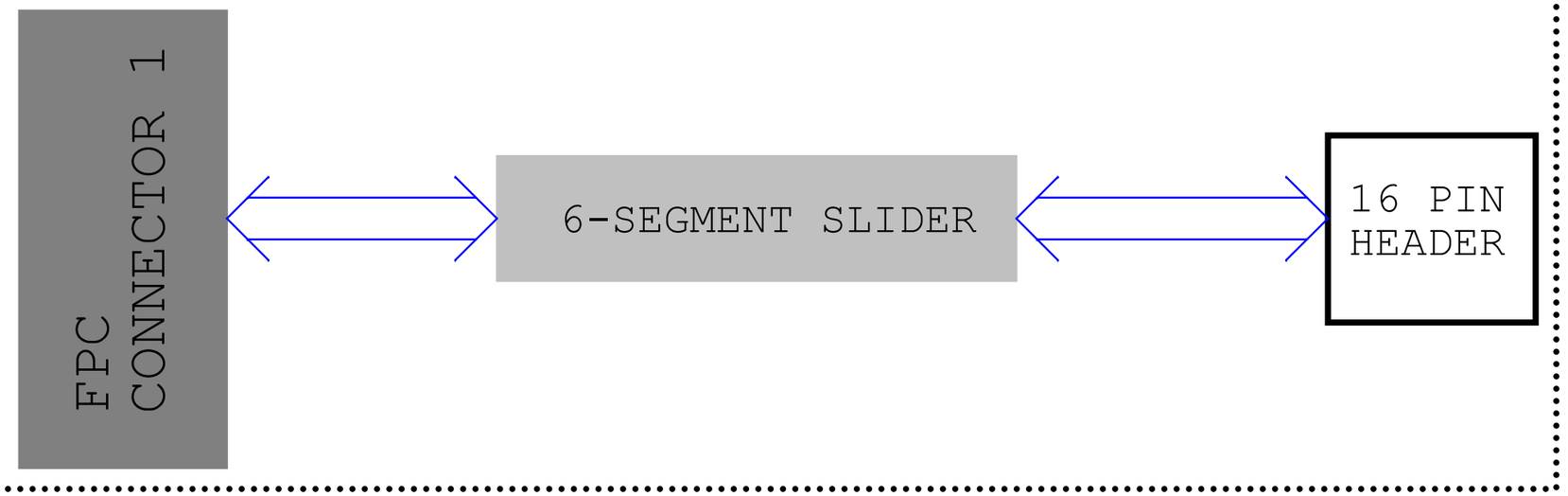

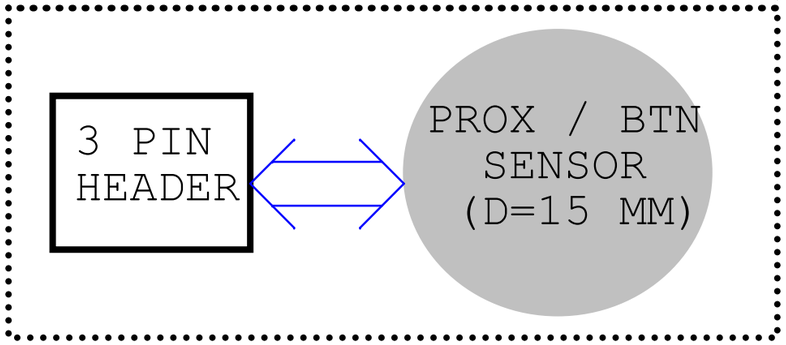

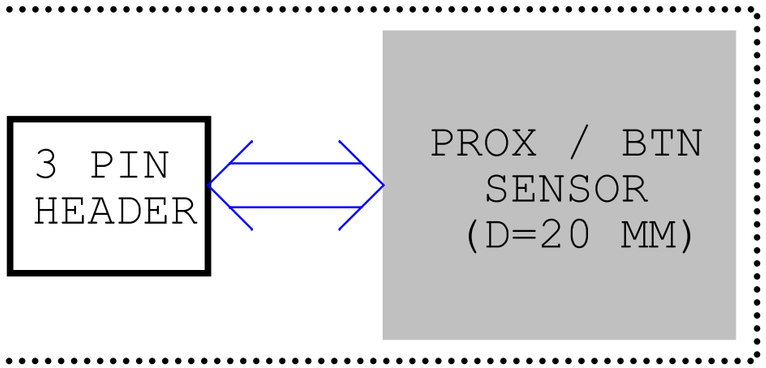

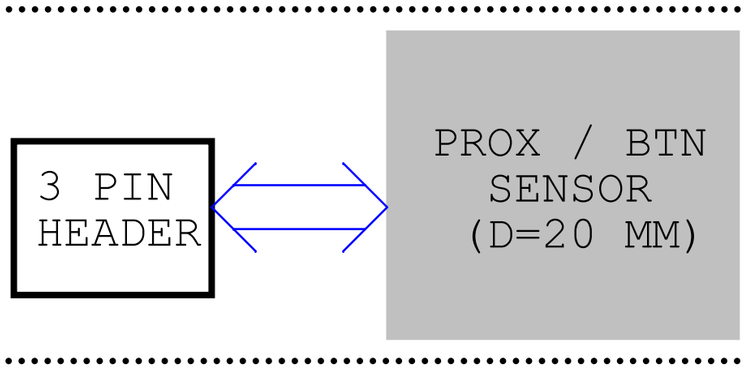

CYPRESS SEMICONDUCTOR
198 CHAMPION COURT
SAN JOSE, CA 95134
(408) 943-2600

CYPRESS SEMICONDUCTOR © 2019

SCH Title : CY8CKIT-148-COIL Inductive Sensing Coil Breakout Board

Page Title : Block Diagram

Size	Document Number	Drawn By	Approved By	Rev
A4	630-60529-01	TAVA	RKAD	2.0

Date: Tuesday, May 07, 2019 Sheet 2 of 7

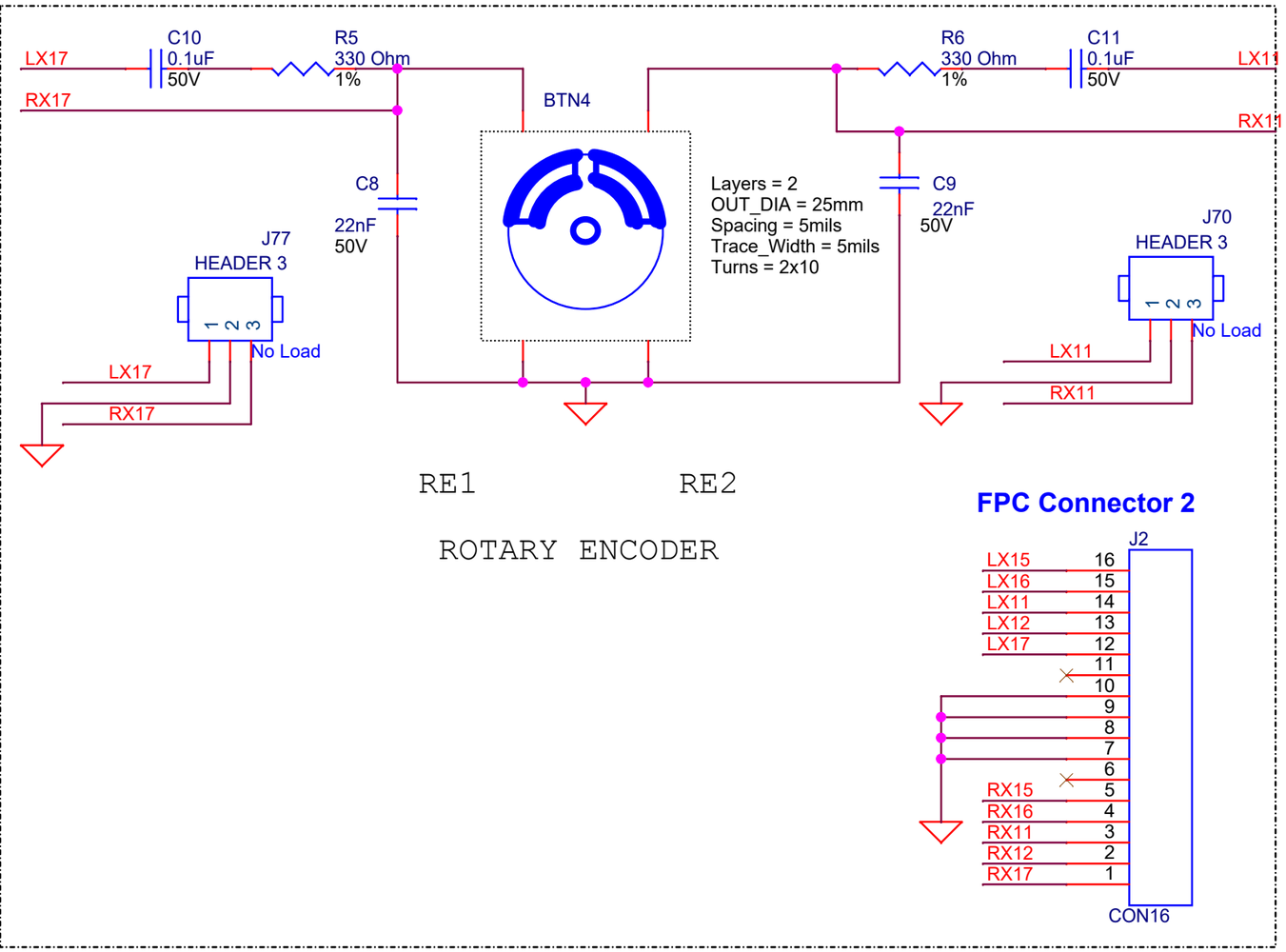

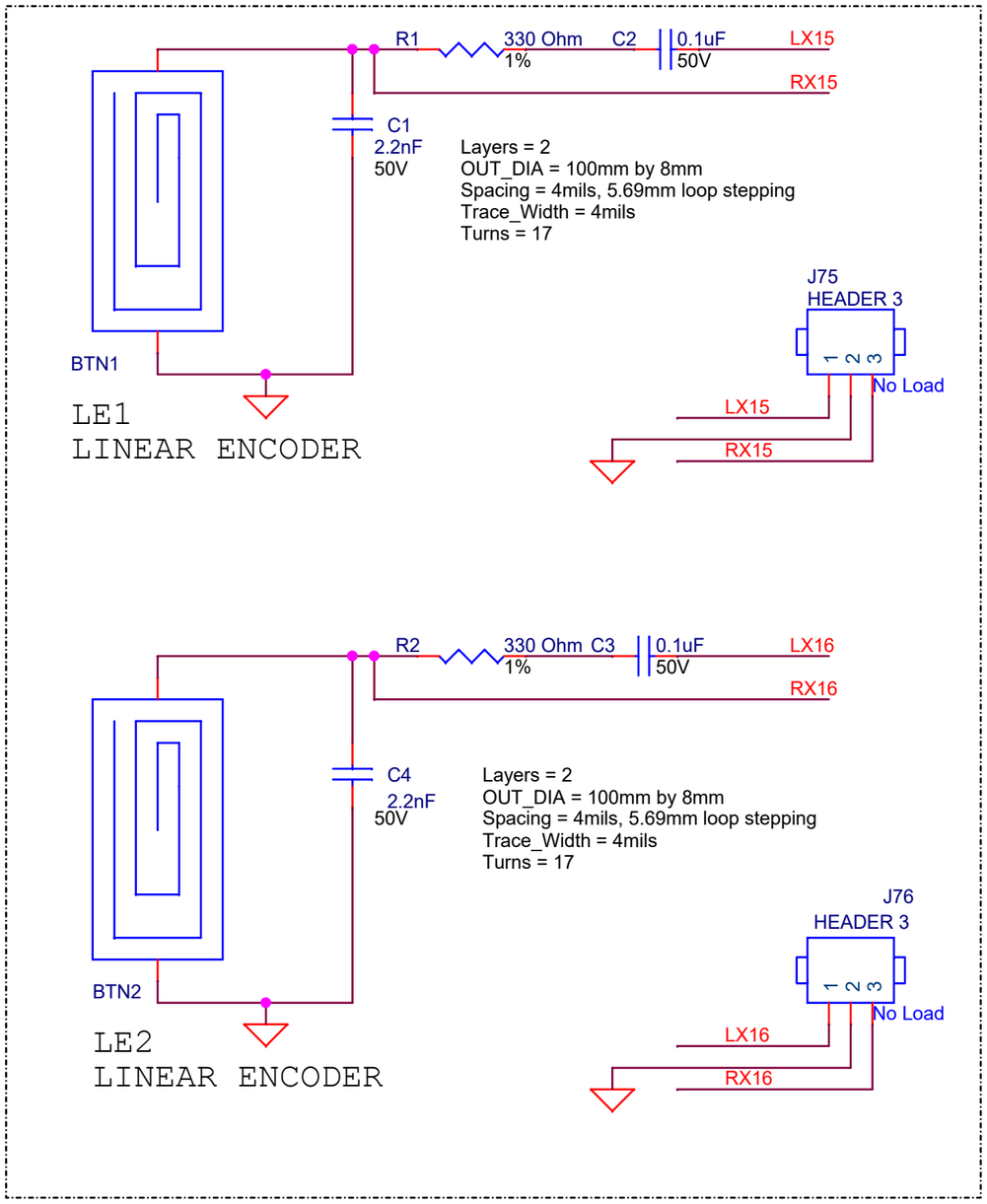

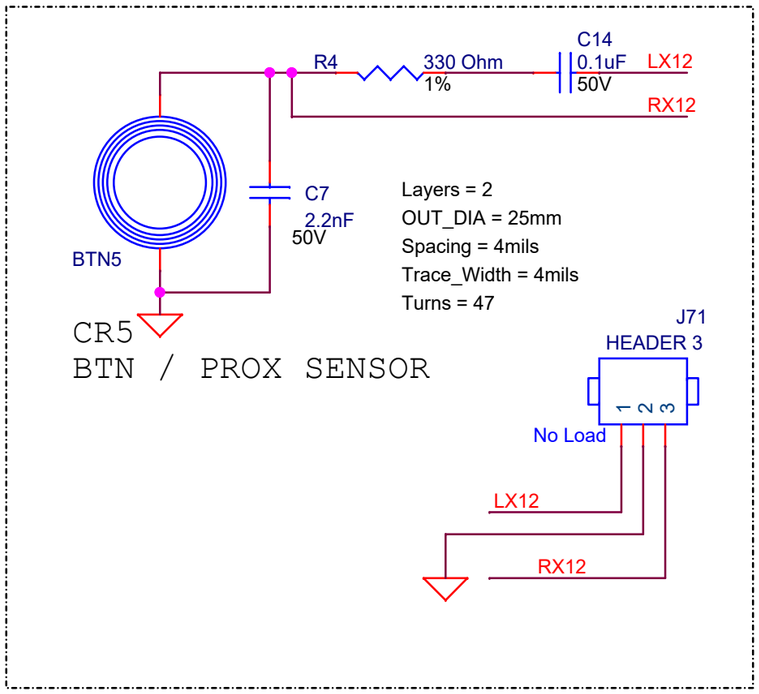

COIL	REF DES
ROTARY ENCODERS (RE1, RE2)	BTN4
25 MM CIRCULAR (CR5)	BTN5
LINEAR ENCODERS (LE1, LE2)	BTN1, BTN2

CYPRESS SEMICONDUCTOR
198 CHAMPION COURT
SAN JOSE, CA 95134
(408) 943-2600

CYPRESS SEMICONDUCTOR © 2019

SCH Title : CY8CKIT-148-COIL Inductive Sensing Coil Breakout Board

Page Title : Inductive Sensors 1

Size	Document Number	Drawn By	Approved By	Rev
A4	630-60529-01	TAVA	RKAD	2.0

Date: Sunday, May 05, 2019 Sheet 3 of 7

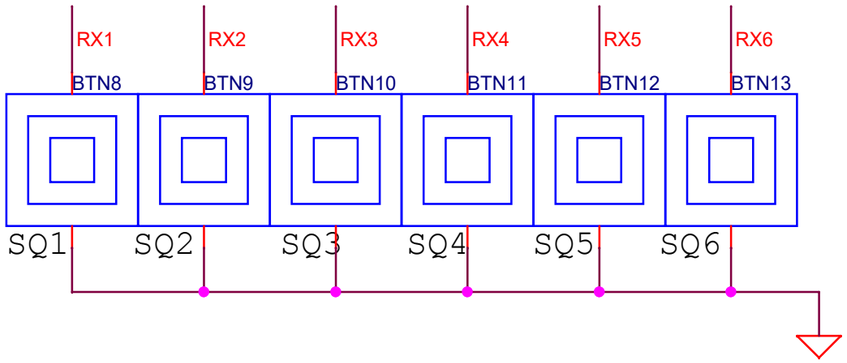

Layers = 2
OUT_DIA = 10mm
Spacing = 4mils
Trace_Width = 4mils
Turns = 18

6-SEGMENT SLIDER

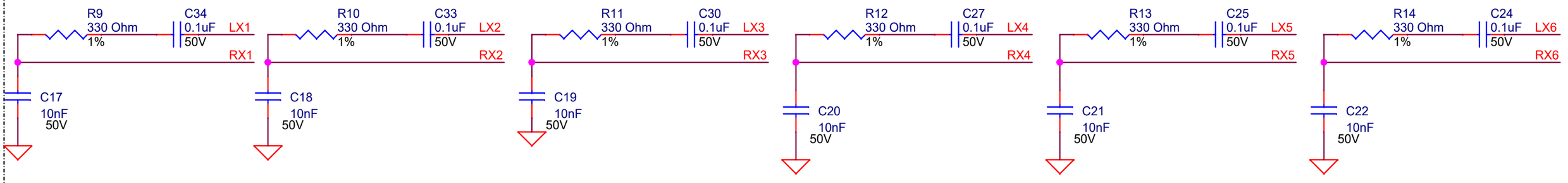

COIL	REF DES
6-SEGMENT SLIDERS SQ1, SQ2, SQ3, SQ4, SQ5, SQ6	BTN8, BTN9, BTN10, BTN11, BTN12, BTN13

I/O Header

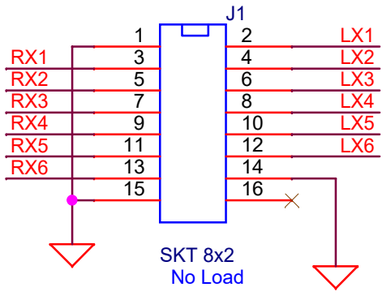

FPC Connector 1

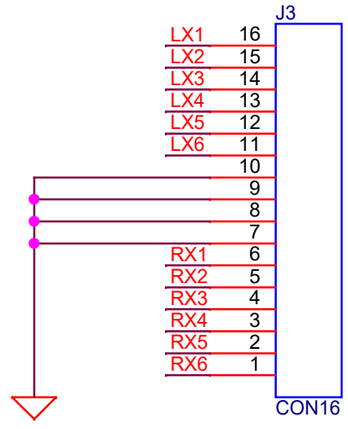

CYPRESS SEMICONDUCTOR
198 CHAMPION COURT
SAN JOSE, CA 95134
(408) 943-2600

CYPRESS SEMICONDUCTOR © 2019

SCH Title : CY8CKIT-148-COIL Inductive Sensing Coil Breakout Board

Page Title : Inductive Sensors 2

Size	Document Number	Drawn By	Approved By	Rev
A4	630-60529-01	TAVA	RKAD	2.0

Date: Tuesday, May 07, 2019 Sheet 4 of 7

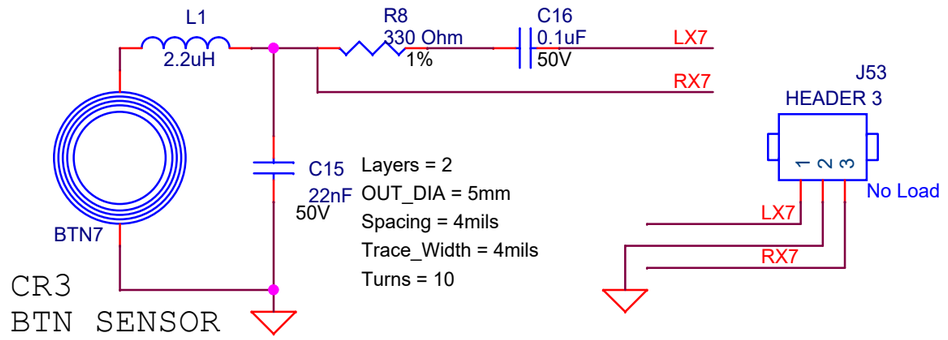

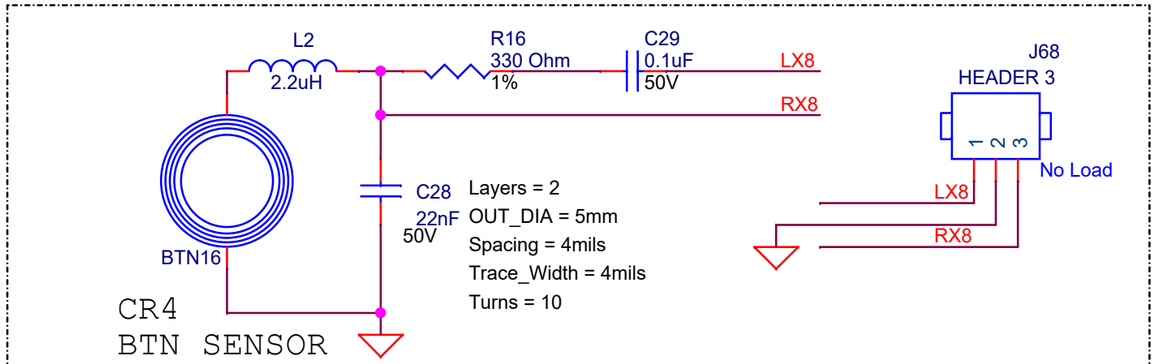

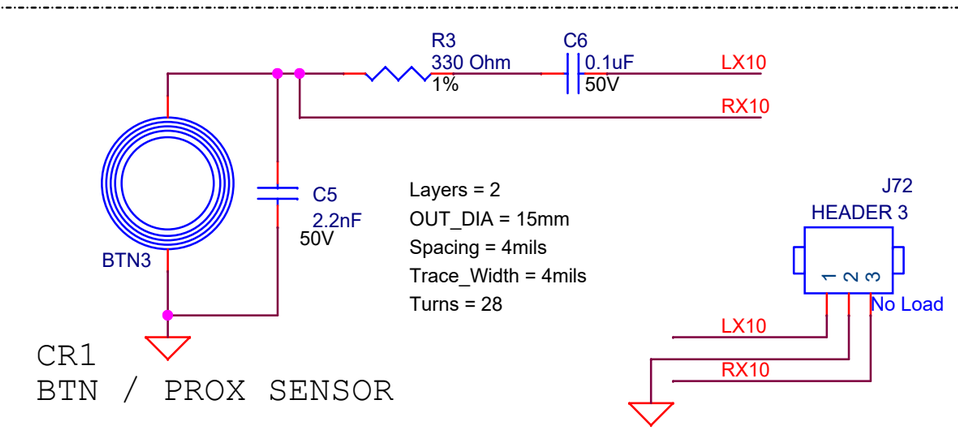

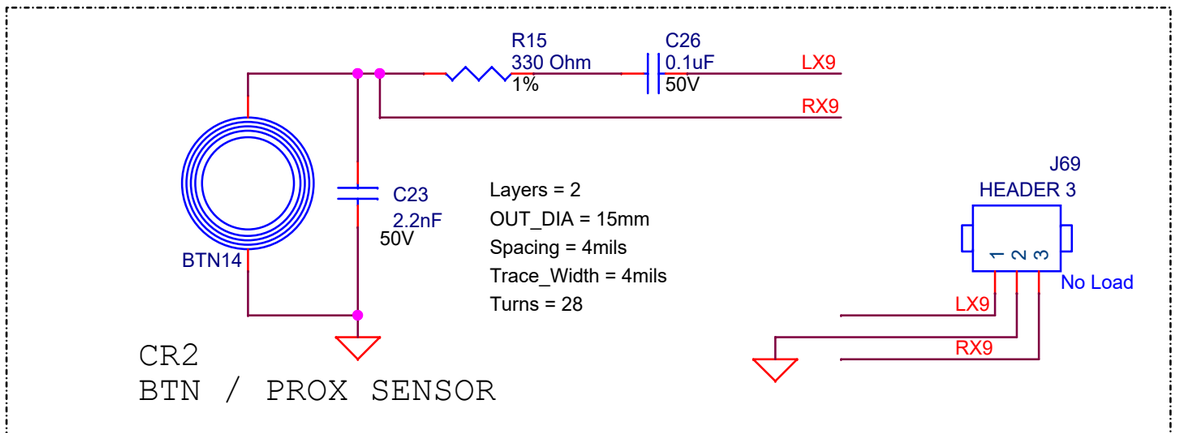

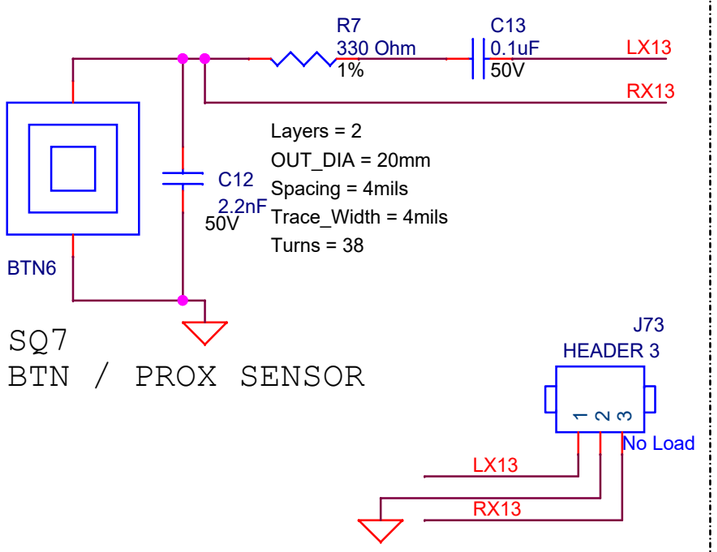

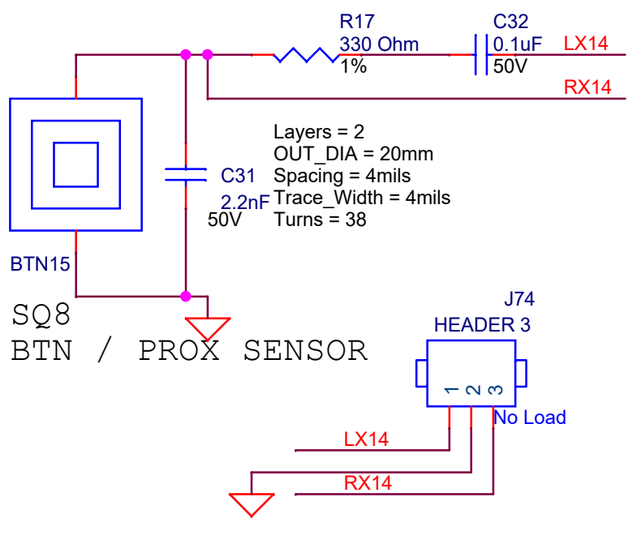

COIL	REF DES
5 MM CIRCULAR (CR3, CR4)	BTN7, BTN16
15 MM CIRCULAR (CR1, CR2)	BTN3, BTN14
20 MM SQUARE (SQ7, SQ8)	BTN6, BTN15

CYPRESS SEMICONDUCTOR
198 CHAMPION COURT
SAN JOSE, CA 95134
(408) 943-2600

CYPRESS SEMICONDUCTOR © 2019

SCH Title : CY8CKIT-148-COIL Inductive Sensing Coil Breakout Board

Page Title : Inductive Sensors 3

Size	Document Number	Drawn By	Approved By	Rev
A4	630-60529-01	TAVA	RKAD	2.0

Date: Tuesday, May 07, 2019 Sheet 5 of 7

Accessories

PCBA label

LBL PCA Label

LBL QR Code



Flex Cable

Flex cable



Metal Target 1

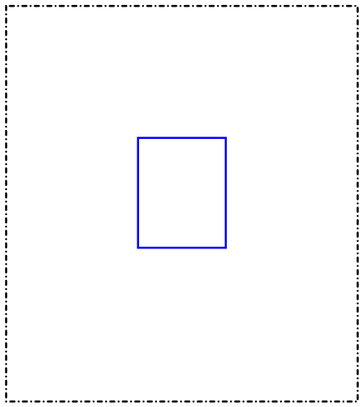

Metal Target 2

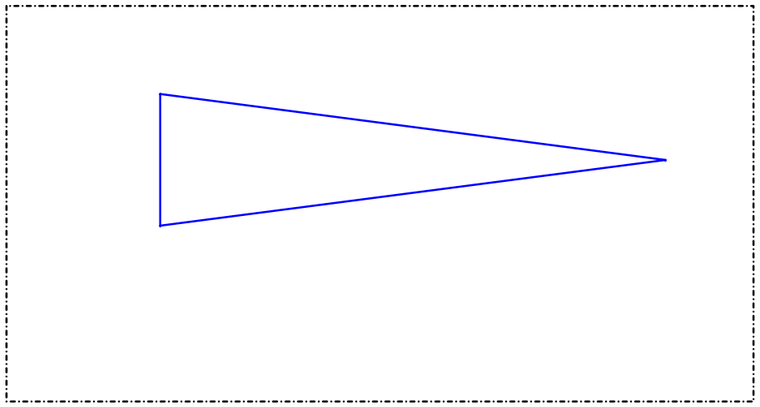

Metal Target 3

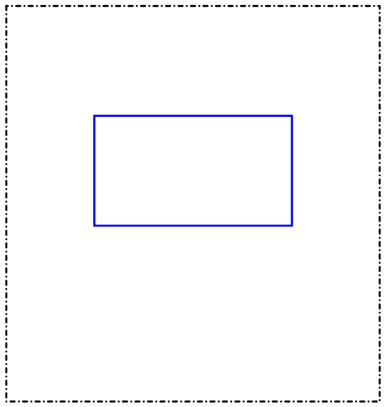

Rotary Target PCB

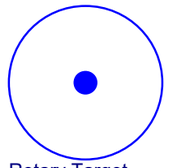

Rotary Target

CYPRESS SEMICONDUCTOR
198 CHAMPION COURT
SAN JOSE, CA 95134
(408) 943-2600

CYPRESS SEMICONDUCTOR © 2019

SCH Title : CY8CKIT-148-COIL Inductive Sensing Coil Breakout Board

Page Title : Accessories

Size	Document Number	Drawn By	Approved By	Rev
A4	630-60529-01	TAVA	RKAD	2.0

Date: Sunday, May 05, 2019

REVISION HISTORY

Rev	DESCRIPTION	DATE
1.0	Internal Revision of the Kit	6/12/2018
2.0	Initial Revision Kit Version	3/22/2019

CYPRESS SEMICONDUCTOR
198 CHAMPION COURT
SAN JOSE, CA 95134
(408) 943-2600

CYPRESS SEMICONDUCTOR © 2019

SCH Title : CY8CKIT-148-COIL Inductive Sensing Coil Breakout Board

Page Title : Revision History

Size	Document Number	Drawn By	Approved By	Rev
A4	630-60529-01	TAVA	RKAD	2.0

Date: Sunday, May 05, 2019 Sheet 7 of 7